KD-J 460P T10 2N

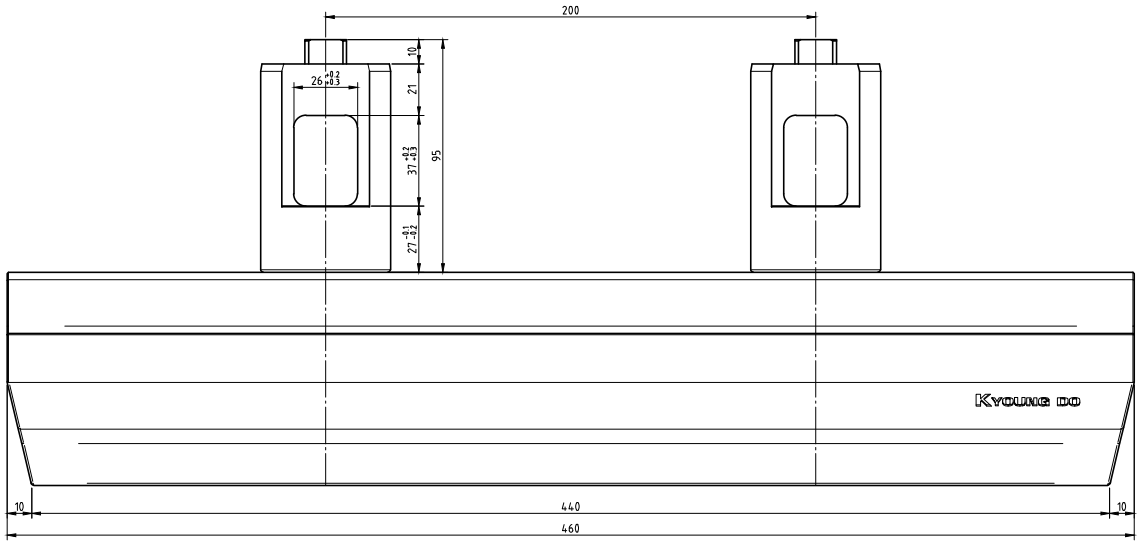

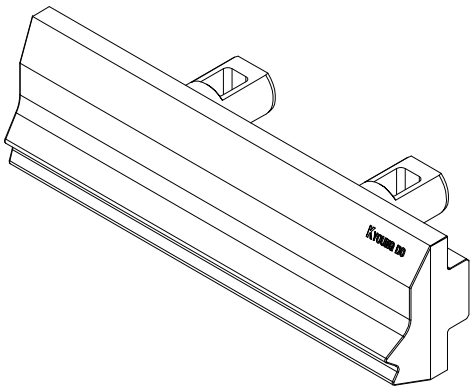

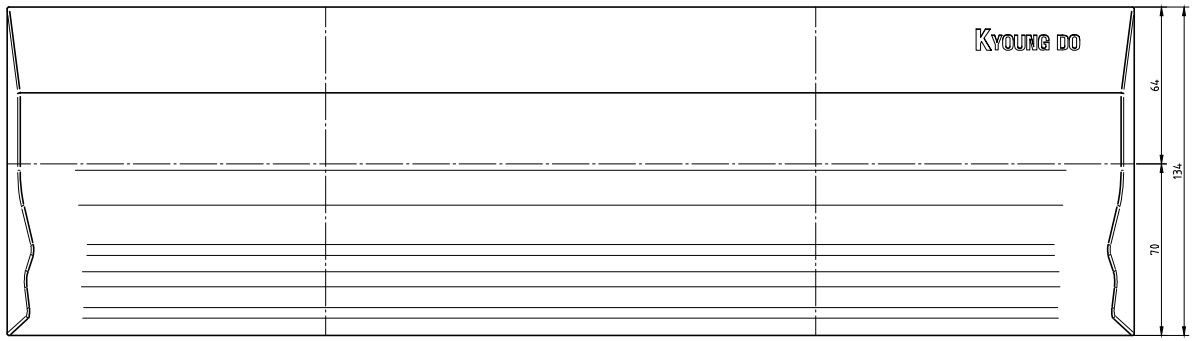

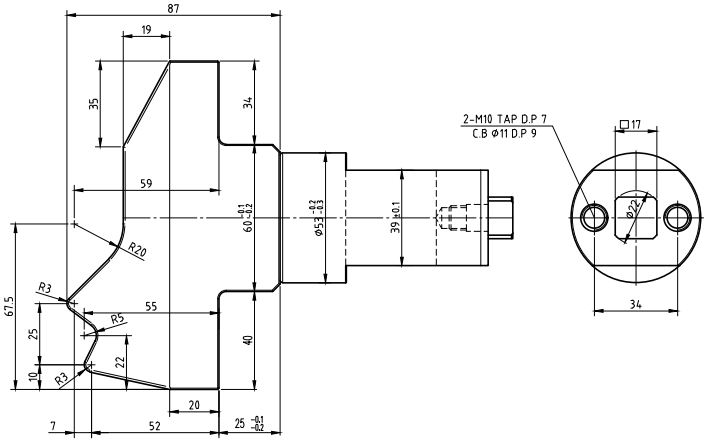

JAW / MAT'L : SKD61	SHAFT / MAT'L : SCM440	JAW / Q.T : Hs 70 ±3	SHAFT / Q.T : Hs 45 ±3